SIGNAL STANDARD DETAIL CHART

STRAIN POLE DATA											MAST ARM DATA																							LUMINAIRE DATA										REMARKS
STD. No.	FIELD LOCATION					STRAIN POLE	TYPE	FOUNDATION DEPTHS(FT)			MAST ARM LENGTH (FT)	MOUNTING HEIGHT(FT)		OFFSET DISTANCES (FT) (Z) (POLE ' TO ATTACHMENT POINT)											WINDLOAD AREAS $(FT)^2$ (X)(Y)										(X)(Y)(Z)3 TOTAL(FT)	LUMINAIRE ARM(FT)	POLE ATTACHMENT POINT ANGLES (deg)										
	STATION	OFFSET(FT)	LT.	RT.	P.O.A.	CLASS#		3' RD.	3' SQ.	4' RD.		A1	A2	B1	B2	B3	B4	B5	B6	B7	B8	B9	B10	B11	B1	B2	B3	B4	B6	B7	B9	B10	B11		C	D	E1	E2	F	G1	G2	H	I1	I2	
NE 36TH STREET																																													
1	70+41.5	51.5|	X		90		III(EX)							40		28		30	16					22																90	180		0	270	EXISTING POLE
2	70+43	51		X	0		III	11	9	9	45	18.5	35	43		33		39	21					27	9.2		9.2		11.6				10.5	1226	16	0	0			90	180	180	0	270	
3	69+54	63|		X	90		III(EX)							45																															EXISTING POLE
4	69+56	52	X		0		III	11	9	9	45	18.5	35	43		36		39	26					31	9.2		9.2		9.2				10.5	1292	12	0	0			90	180	180	0	270	

NOTE: POLES 1 AND 3 ARE EXISTING AND ARE ONLY SHOWN ON THIS CHART TO CALL OUT THE LOCATIONS OF THE EXISTING TENONS TO BE USED.

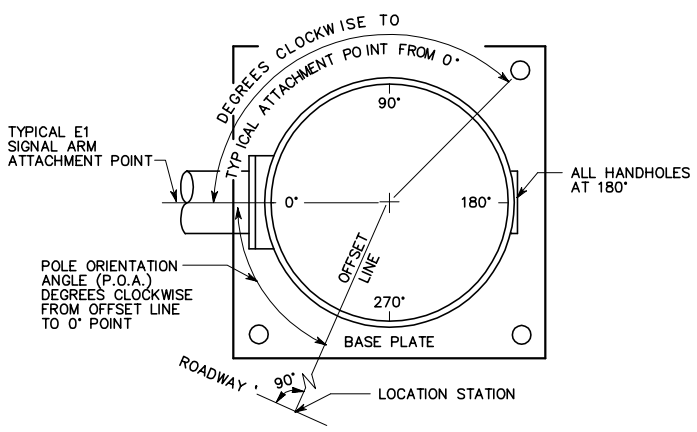

POLE ORIENTATION AND ATTACHMENT POINT DETAIL
PLAN VIEW

LEGEND

a. VEHICLE SIGNAL HEAD
b. SIGN
c. STREET NAME SIGN
d. PRE-EMPT DETECTOR
e. NOT USED
f. LUMINAIRE
g. PEDESTRIAN SIGNAL HEAD
h. TERMINAL CABINET
i. PEDESTRIAN PUSH BUTTON ASSEMBLY, WSDOT STANDARD PLAN J-5a
j. HANDHOLE

NOTES

1. MOUNTING COUPLING INSTALLED BY FABRICATOR AT OFFSET DISTANCE INDICATED IN CHART.
2. FIELD INSTALLED, ORIENTATION TO BE APPROVED BY ENGINEER.
3. NO TENONS REQUIRED FOR PRE-EMPT DETECTOR OR SIGNS.
4. FROM THE BOTTOM OF THE POLE BASE TO CENTER OF PEDESTRIAN PUSH BUTTON.
5. TWO PIECE ANCHOR BOLT COVERS SHALL BE PROVIDED WITH EACH POLE.
6. ALL POLE LOCATIONS TO BE APPROVED BY ENGINEER.
7. SEE SPECIAL PROVISIONS FOR LUMINAIRE ARM TYPE.

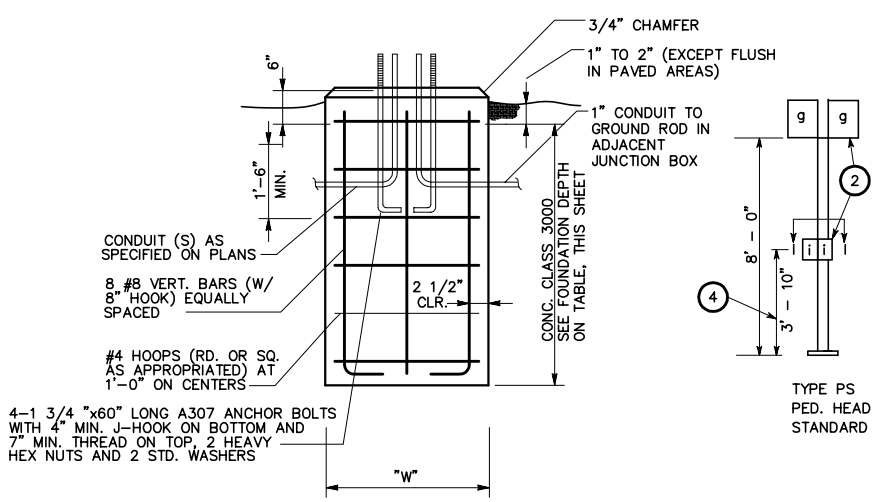

POLE FOUNDATION

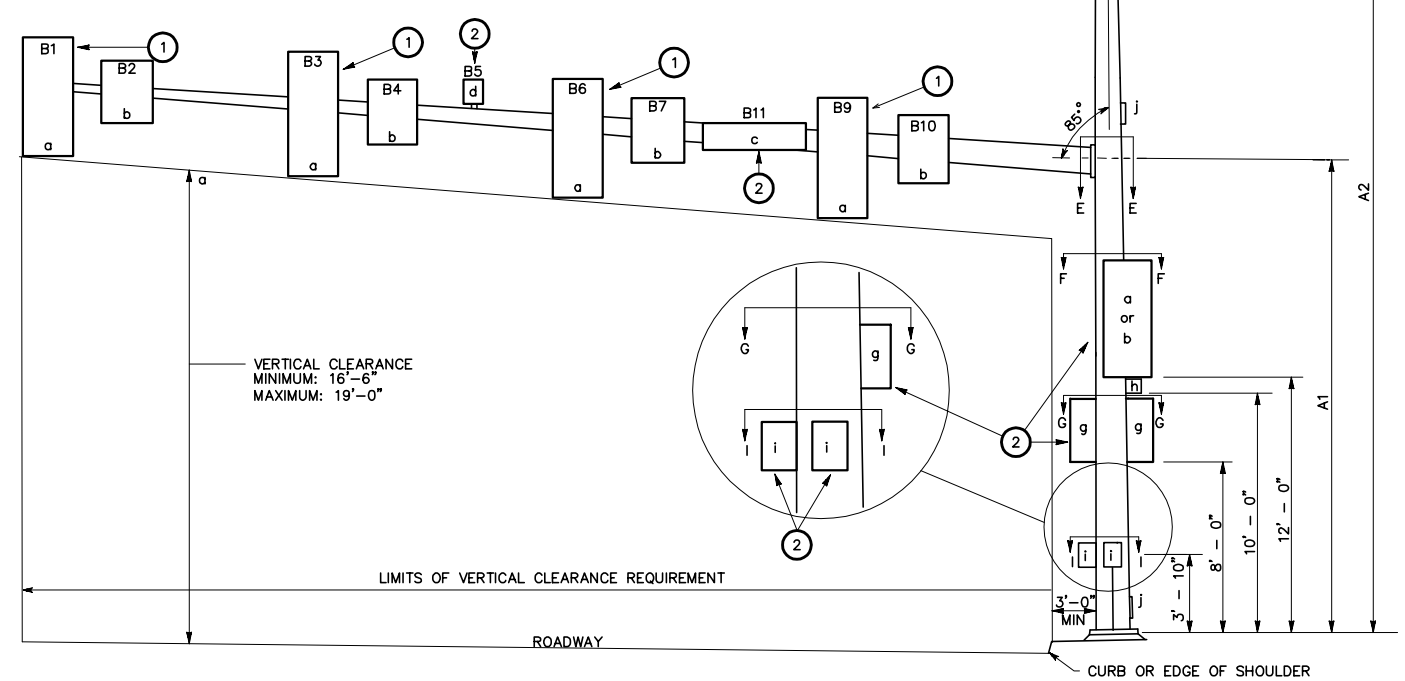

TYPE III
COMBINATION LIGHTING AND MAST ARM SIGNAL STANDARD

APPROVED FOR CONSTRUCTION

For: Dave Rhodes
Director of Public Works
City of Redmond

Date: _____
Plan Check Engr: _____
Storm: _____
Utility: _____
Fire: _____
Transportation: _____
Planning: _____

This approval is for the design concept only. These plans appear to be in conformance with the City of Redmond design standards for construction. This approval shall not be construed as authorizing construction not in accordance with applicable City standards. The City reserves the right to require revisions to the approved plans to assure conformance with City of Redmond design standards for construction at any time that it is discovered that the proposed construction does not otherwise meet the applicable construction standards. The owner is required to provide designs and plans in accordance with applicable City standards and assures that construction is accomplished in accordance with those standards. The owner and/or design engineer and/or developer may be required to make necessary approved field revisions to correct any errors or omissions found on the approved plan.

"INSERT PE STAMP HERE"

NO.	DATE	BY	CKD.	REVISION

CITY OF REDMOND
15670 N.E. 85TH STREET
REDMOND, WASHINGTON 98052
PH. (425) 882-6462

"INSERT ENGINEERING FIRMS NAME HERE"

DESIGNED BY: **
DRAWN BY: BH
CHECKED BY: **
DATE: **

CITY OF REDMOND
156TH AVE NE / NE 36TH STREET
POLE SCHEDULE

__**
PROJECT NO.

3 OF 3
SHEET

IMAGES:
XREF'S:
DATE: 10/02/02 FILENAME: 156-36 POLE DIAGRAM